UNIVERSITY OF CAMBRIDGE INTERNATIONAL EXAMINATIONS
General Certificate of Education
Advanced Subsidiary Level and Advanced Level

CANDIDATE NAME	
CENTRE NUMBER	
CANDIDATE NUMBER	

6151135115 19

PHYSICS **9702/31**

Paper 3 Advanced Practical Skills 1 **October/November 2012**

2 hours

Candidates answer on the Question Paper.

Additional Materials: As listed in the Confidential Instructions.

READ THESE INSTRUCTIONS FIRST

Write your Centre number, candidate number and name on all work you hand in.
Write in dark blue or black pen.
You may use a soft pencil for any diagrams, graphs or rough working.
Do not use staples, paper clips, highlighters, glue or correction fluid.
DO **NOT** WRITE IN ANY BARCODES.

Answer **both** questions.
You will be allowed to work with the apparatus for a maximum of one hour for each question.
You are expected to record all your observations as soon as these observations are made, and to plan the presentation of the records so that it is not necessary to make a fair copy of them.
You may lose marks if you do not show your working or if you do not use appropriate units.

Additional answer paper and graph paper should be used only if it becomes necessary to do so.
You are reminded of the need for good English and clear presentation in your answers.

At the end of the examination, fasten all your work securely together.
The number of marks is given in brackets [ ] at the end of each question or part question.

For Examiner's Use	
1	
2	
Total	

This document consists of **11** printed pages and **1** blank page.

© UCLES 2012

You may not need to use all of the materials provided.

For Examiner's Use

1 In this experiment, you will investigate how the extension of a spring depends on the load applied to it.

(a) Set up the apparatus as shown in Fig. 1.1 where the mass m is 200 g.

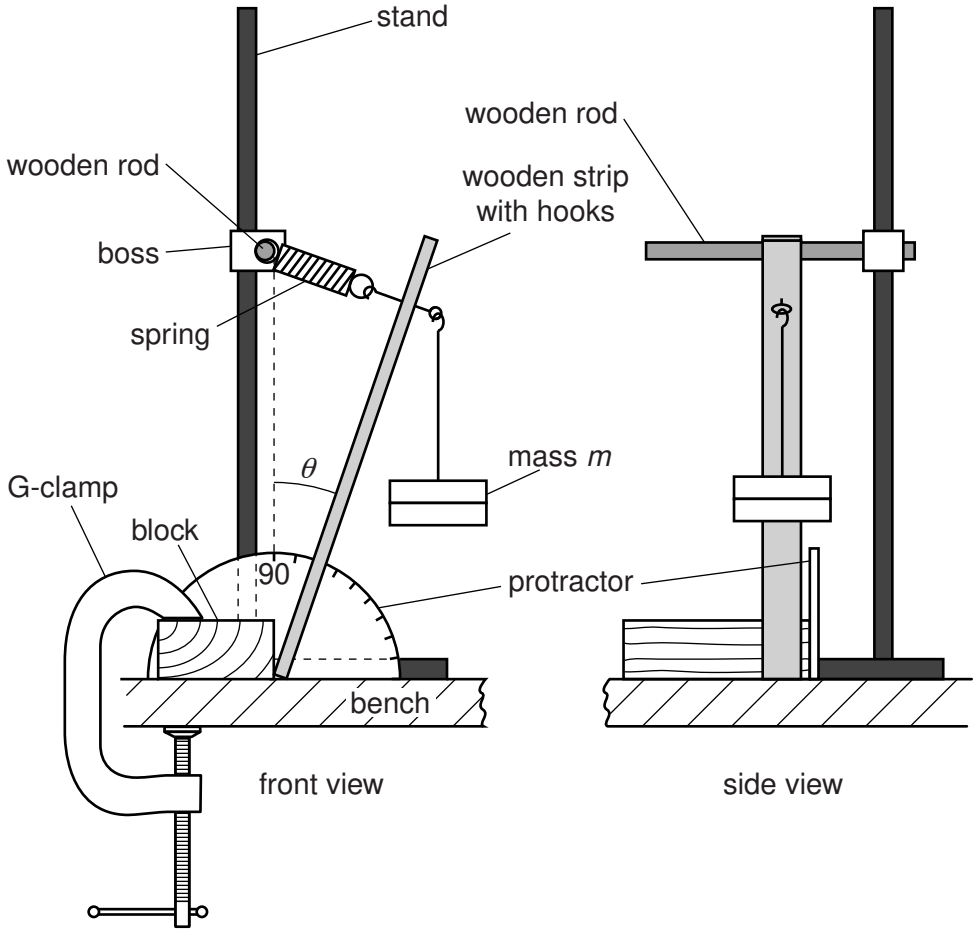

Fig. 1.1

Use the Blu-Tack to attach the protractor to the edge of the block along the 90° line.

Use the ruler to ensure that the wooden rod is directly above the edge of the block as shown. Clamp the block to the bench with the G-clamp.

The boss should be clamped **tightly** to the stand to prevent the rod from rotating.

© UCLES 2012

(b) (i) Adjust the height of the boss so that the spring is perpendicular to the wooden strip. Use the set square to check that the strip and spring are perpendicular to each other by placing it **gently** as shown in Fig. 1.2. Any contact of the set square with the strip will cause the apparatus to move.

For Examiner's Use

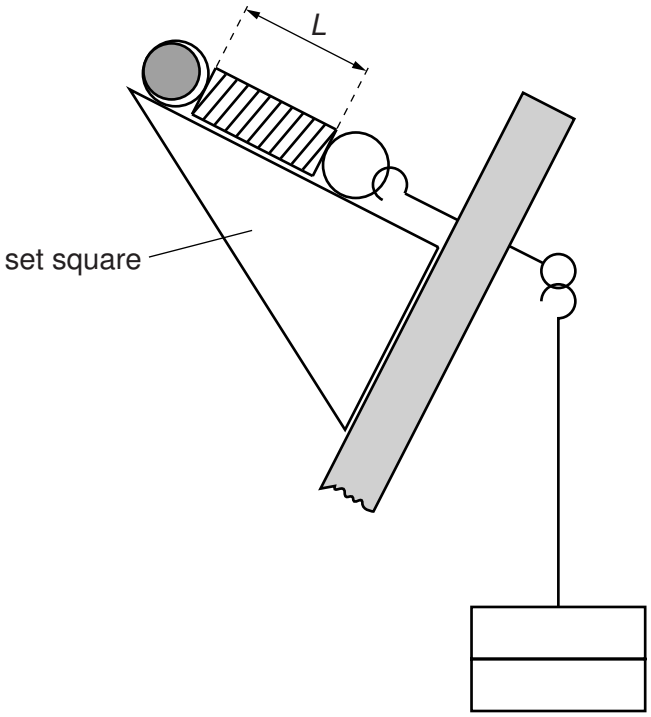

Fig. 1.2

(ii) Measure and record the length L of the coiled part of the spring as shown in Fig. 1.2.

L = ...[1]

(iii) Measure and record the angle θ between the strip and the vertical line on the protractor as shown in Fig. 1.1.

θ = ...[1]

(c) Change m and repeat **(b)** until you have five sets of values of m, L and θ.
For each set of readings the spring and strip should be perpendicular to each other.

Include values of $m \sin \theta$ in your table.

For Examiner's Use

[10]

(d) (i) Plot a graph of L on the y-axis against $m \sin \theta$ on the x-axis. [3]

(ii) Draw the straight line of best fit. [1]

(iii) Determine the gradient and y-intercept of this line.

gradient = ...

y-intercept = ...
[2]

© UCLES 2012

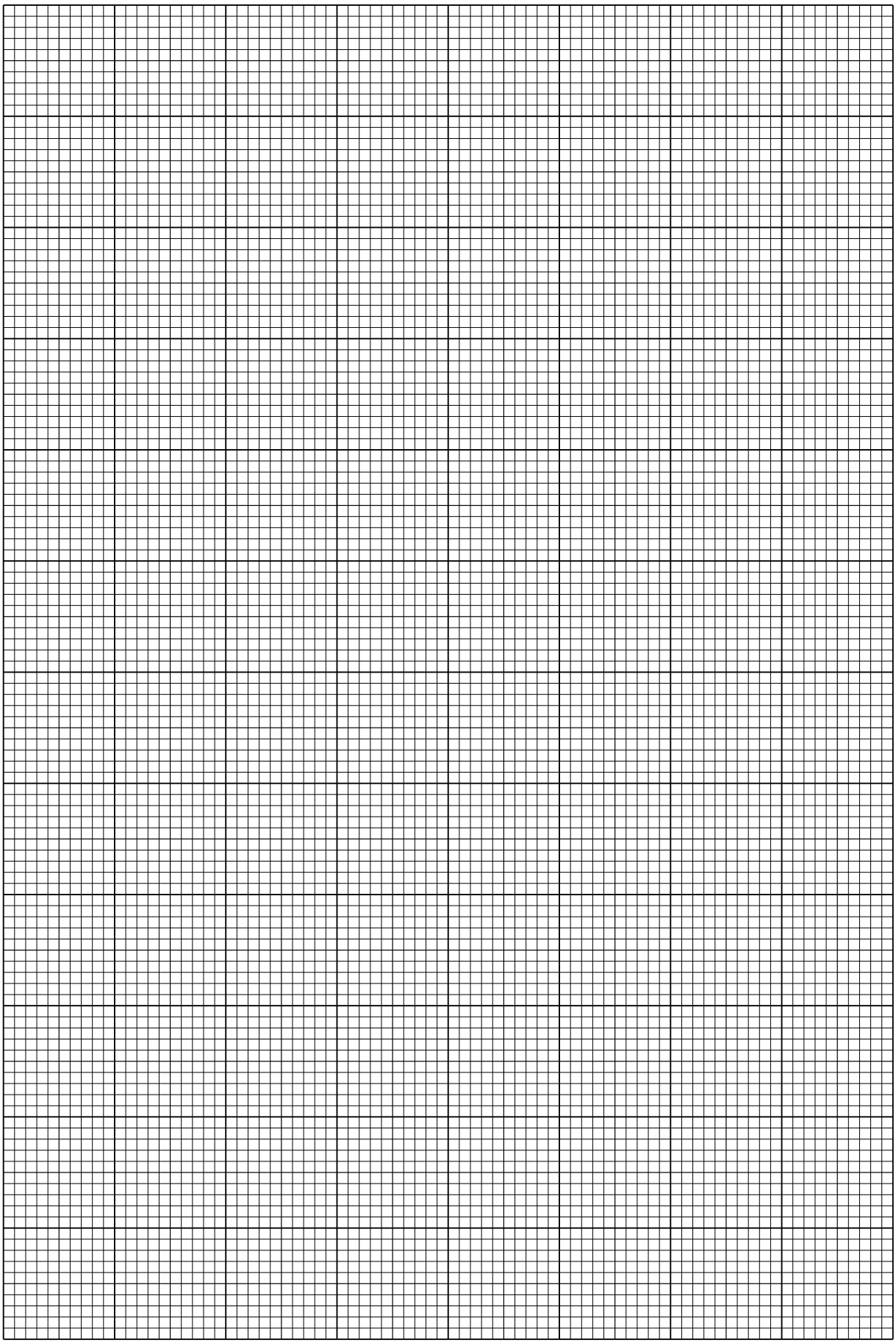

For Examiner's Use

© UCLES 2012

(e) The quantities L, m and θ are related by the equation

$$L = P\,m \sin\theta + Q$$

where P and Q are constants.

Using your answers in **(d)(iii)**, determine the values of P and Q.
Give appropriate units.

For Examiner's Use

$P =$ .....

$Q =$ .....

[2]

You may not need to use all of the materials provided.

For Examiner's Use

2 In this experiment, you will investigate how the motion of a rule depends on its mass.

(a) (i) Tie one of the lengths of string into a loop of circumference approximately 40 cm.

(ii) Measure and record the value of the circumference of the loop.

circumference = ...[1]

(iii) Estimate the percentage uncertainty in your value of the circumference.

percentage uncertainty = ...[1]

(iv) Tie the other length of string into a loop of the same circumference.
Measure and record the value of the circumference of the loop.

circumference = ...[1]

© UCLES 2012

[Turn over

(b) (i) Set up the apparatus as shown in Fig. 2.1.

For Examiner's Use

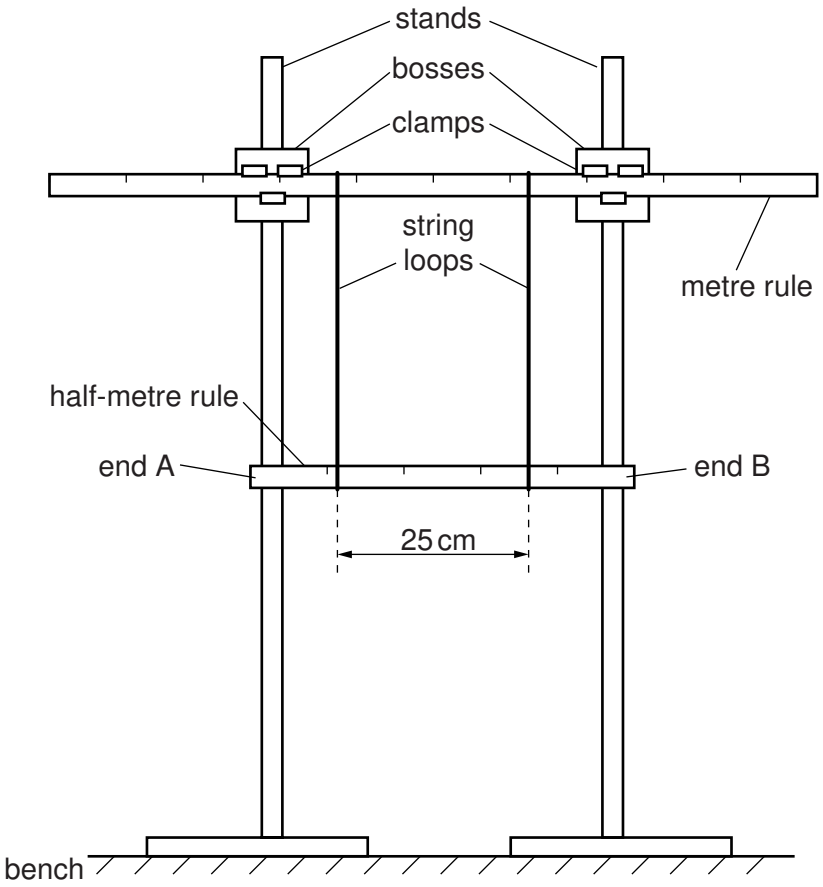

Fig. 2.1

Both rules should have their markings facing you.

The strings should be looped over the metre rule and support the half-metre rule.

The strings should be vertical, 25 cm apart and equal distances from the centre of the lower rule.

(ii) Move the end A of the half-metre rule towards you and the end B away from you. Release the rule and watch the movement.
End A of the half-metre rule will move away from you and back towards you, completing a swing.
The time taken for one complete swing is *T*.
By timing several of these complete swings, determine an accurate value for *T*.

T = ... s [2]

(c) **(i)** Repeat **(b)** with the half-metre rule at the top and the metre rule supported by the strings.

For Examiner's Use

T = ...[2]

(ii) Repeat **(b)** with the 30 cm ruler supported by the strings.

T = ...[1]

(d) It is suggested that the relationship between T and the mass m of the supported rule is

$$T = km$$

where k is a constant assuming the loops are of equal circumference. The value of T also depends on the value of this circumference.

(i) Copy the data from the card.

Mass of metre rule = ……g

Mass of half-metre rule = ……g

Mass of 30 cm ruler = ……g

(ii) Using your data from **(b)(ii)**, **(c)(i)** and **(c)(ii)** and the data on the card, calculate three values of k.

For Examiner's Use

first value of k = ...

second value of k = ...

third value of k = ...

[2]

(iii) Justify the number of significant figures that you have given for your values of k.

.....

.....

.....[1]

(iv) Explain whether your results in **(d)(ii)** support the suggested relationship.

.....

.....

.....

.....[1]

(e) (i) Describe four sources of uncertainty or limitations of the procedure for this experiment.

For Examiner's Use

1. .....

.....

2. .....

.....

3. .....

.....

4. .....

.....

[4]

(ii) Describe four improvements that could be made to this experiment. You may suggest the use of other apparatus or different procedures.

1. .....

.....

2. .....

.....

3. .....

.....

4. .....

.....

[4]

© UCLES 2012

BLANK PAGE

Permission to reproduce items where third-party owned material protected by copyright is included has been sought and cleared where possible. Every reasonable effort has been made by the publisher (UCLES) to trace copyright holders, but if any items requiring clearance have unwittingly been included, the publisher will be pleased to make amends at the earliest possible opportunity.

University of Cambridge International Examinations is part of the Cambridge Assessment Group. Cambridge Assessment is the brand name of University of Cambridge Local Examinations Syndicate (UCLES), which is itself a department of the University of Cambridge.

© UCLES 2012